DVS-PY
SUPPLY AIR VALVE

AIR MANAGEMENT SYSTEMS

PRODUCT PROPERTIES

Stainless steel valve *including* fixing collar

DVS-PY is a supply valve suitable for houses, offices etc.

- Good adjusting features
- Low noise level
- Quick and easy to install
- Airflow easy to measure

CONSTRUCTION

The **DVS-PY** is manufactured from Stainless steel alloy AISI304/2B. The valve body has a gasket, made of cellular plastic and the control disc, with screw spindle, enables easy regulation and positional locking. Fixing collar **DVS-FY** is manufactured from Stainless steel alloy AISI304/2B.

SOUND POWER LEVEL L_W

DVS-PY	CORRECTION K_{oct} (dB)						
	Middle frequency by octave band (Hz)						
	125	250	500	1k	2k	4k	8k
080	2	2	1	0	-3	-9	-17
100	7	3	2	-2	-6	-14	-30
125	3	6	4	-3	-11	-21	-37
150	7	5	3	-2	-10	-20	-34
160	6	7	3	-3	-11	-27	-34
200	7	6	3	-2	-10	-25	-34
Tol.+/-	3	2	2	2	2	2	3

Sound power levels by octave bands are obtained by adding to total sound pressure level L_{p10A}, dB(A) the corrections K_{oct} presented in the table according to the following formula:

$L_{Woct} = L_{p10A} + K_{oct}$

Correction K_{oct} is average value in range of use of DVS-PY unit.

DIMENSIONS in mm

DVS-PY	Ø 080	Ø 100	Ø 125	Ø150	Ø 160	Ø200
A	116	140	170	202	202	254
B	76	92	111	135	135	194
C	40	40	46	54	54	64
W (gr)	150	170	230	340	340	550
D	105	125	150	175	185	225
E	79	99	124	149	159	199
W (gr)	80	100	120	180	190	240

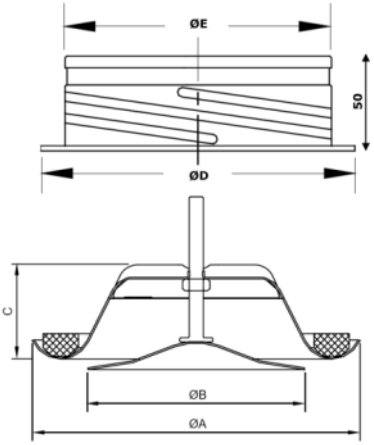

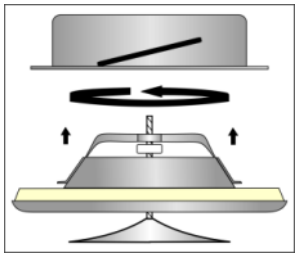

REGULATION AND MEASUREMENTS

Regulation of airflow is achieved by turning the control disc to change adjustment dimension s (mm). The measurement of airflow is made by a pressure difference measurement with a separate measuring tube. Refer to airflow measurement diagrams for information.

DVS-PY	Adjustment s (mm)	SOUND ATTENUATION ΔL							
		Middle frequency by octave band (Hz)							
		63	125	250	500	1k	2k	4k	8k
080	-3	24	21	16	12	9	7	5	5
	3	24	19	13	10	7	4	4	4
	9	24	19	13	9	6	3	3	4
100	-3	24	19	13	10	9	9	11	9
	6	23	16	11	7	6	5	6	6
	10	23	17	11	7	5	5	5	6
125	-7	19	16	11	7	4	4	5	6
	0	18	16	10	6	4	3	4	6
	15	19	15	9	5	3	2	3	4
150	-5	20	13	10	7	5	4	5	5
	3	19	12	9	5	4	3	4	4
	15	19	12	8	4	3	2	4	3
160	-5	18	13	10	6	5	5	5	6
	5	17	12	9	5	4	3	4	4
	10	17	12	8	5	4	3	4	3
200	3	17	12	8	7	7	5	7	6
	6	17	12	7	6	6	5	7	5
	12	17	11	6	5	5	4	6	5
Tol. ±	6	3	2	2	2	2	2	2	3

The average sound attenuation ΔL from duct to room including the end reflection of the connecting duct in ceiling installation is obtained in the table above.

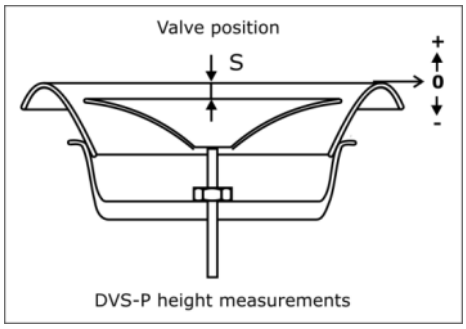

DVS-PY
SUPPLY AIR VALVE

AIR MANAGEMENT SYSTEMS

DVS-PY 080 mm

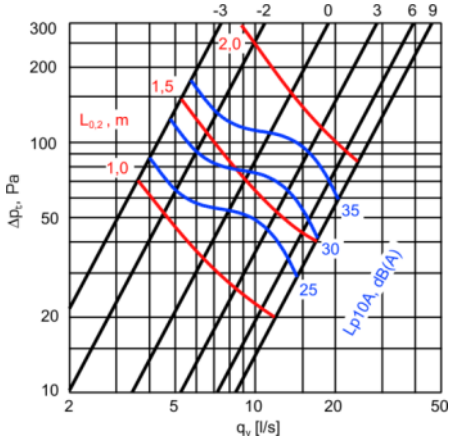

DVS-PY 150 mm

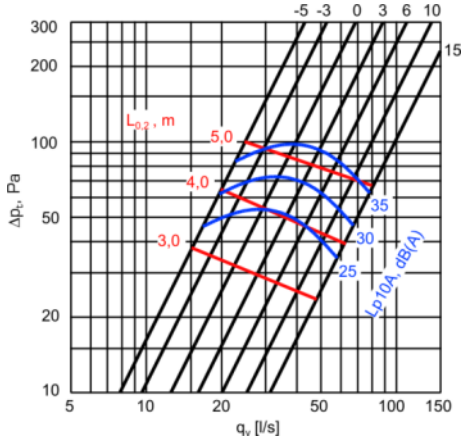

DVS-PY 100 mm

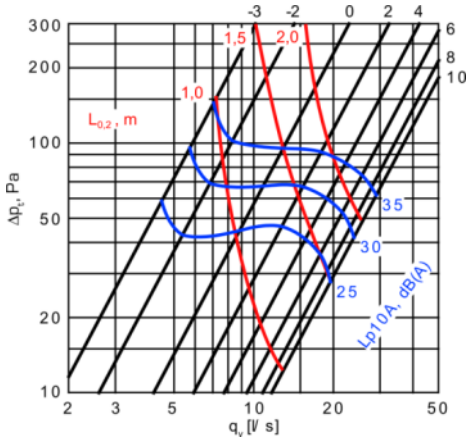

DVS-PY 160 mm

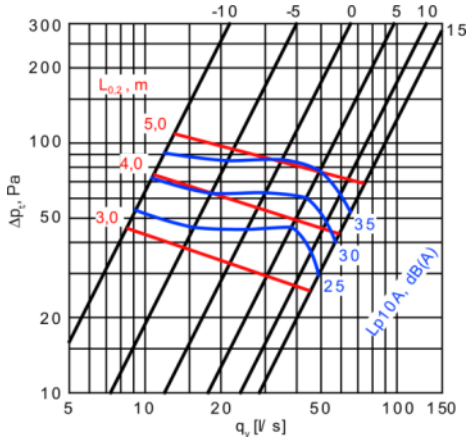

DVS-PY 125 mm

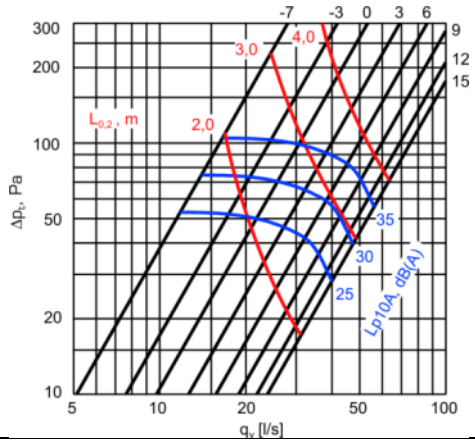

DVS-PY 200 mm

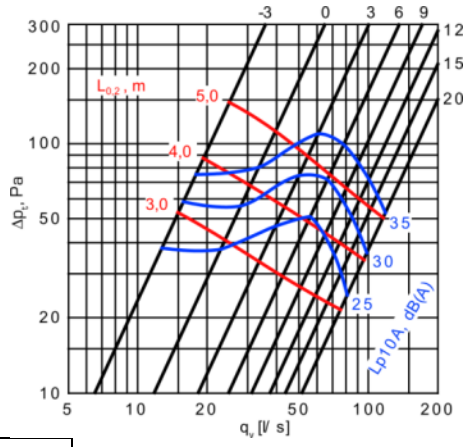

DEFINITIONS		
q_v	air volume	(m^3/h)
Δp_t	total pressure drop	(Pa)
L_{p10A}	sound pressure level with 4 dB room attenuation (10 m^2sab)	[dB(A)]
L_{Woct}	sound power level by octave bands	(dB)
ΔL	sound attenuation	(dB)
K_{oct}	correction	(dB)